PROGRAM TO READY COMMERCIAL BANKS AGAINST DANGERS OF NUCLEAR ATTACK

20 February 1958

CONTENTS

Page

INTRODUCTION--Colonel T. G. Bilbo, USA, Member of the Faculty, ICAF 1

SPEAKER--Mr. G. Edward Cooper, Senior Vice President, The Philadelphia National Bank 1

GENERAL DISCUSSION 17

Publication No. L58-106

INDUSTRIAL COLLEGE OF THE ARMED FORCES

Washington, D. C.

Mr. G. Edward Cooper, Senior Vice President, The Philadelphia National Bank was born in the Philadelphia area. He is a graduate of the Philadelphia Chapter, A.I. B.; graduate of the Graduate School of Banking, Rutgers University and has studied both with the University of Pennsylvania and Temple University. He entered the employ of The Philadelphia National Bank in 1926 and advanced successively to his present position. He has served as a lecturer at the University of Wisconsin and Rutgers University. He is Chairman of the Banking Committee on Emergency Operation working with the Advisory Committee on Commercial Banking Preparedness which was appointed by the Federal Reserve Board in cooperation with other bank supervisory authority at the direction of the Office of Defense Mobilization. He is a member of the Bank Management Commission of the American Bankers Association and the Pennsylvania Bankers Association. This is his first lecture at the College.

PROGRAM TO READY COMMERCIAL BANKS AGAINST DANGERS OF NUCLEAR ATTACK

20 February 1958

COLONEL BILBO: General Mundy and Gentlemen: You may recall that in my introduction to economic stabilization I had a paragraph that went something like this: "Suppose that 50 of the largest cities were to be wiped out by a nuclear attack tonight. Would the survivors in undamaged cities be willing to accept currency in exchange for food, clothing, and shelter, or would they resort to barter trade? Would checks be acceptable as a medium of exchange? If so, who would act as the clearinghouse?"

This morning we have with us a man who can answer some of those questions. It gives me great pleasure to introduce to you Mr. G. Edward Cooper, Senior Vice President of The Philadelphia National Bank.

MR. COOPER: Thank you, Colonel Bilbo.

General Mundy, Ladies, and Gentlemen: I was glad, when I looked at the scope of this lecture, to notice that the subject had to do with the problems of the banking system in case of a nuclear attack. I will be very frank with you this morning and say that there are more problems than there are answers. But we are working very hard to get the answers.

Today we seem to be living in a new world. Something new has been added. Strange objects are flying about in outer space at tremendous speeds. What was science fiction yesterday has become fact today. What about the future? Will the horrible destructive visions of today become the realities of tomorrow? As a kind of backdrop for our discussion today, I'm going to ask you to penetrate into the realm of the unknown and transplant your thoughts for a few moments into the imaginary tomorrow.

It was a quiet and peaceful day in May 19??--quiet and peaceful, that is, until the electrifying news was received. Reports from the fringe areas told about all hell breaking loose. Then there was dead silence. Information received since has been fragmentary and inconsistent. Several hours have now gone by. Certain sections of the country are out of communication and little is known about their state of affairs. Other cities and towns are untouched, but they are neither

quiet nor peaceful. In these communities, rumors are rampant and the people are panicky.

Hundreds of questions are in the minds of the excited populace--among them, questions pertaining to their money and personal wealth. "Will the banks remain open? How far will their currency stretch? Can I withdraw my money? Will my checks be collected? Can I get credit?" Similar questions are in the minds of the bankers in these communities. In addition, the bankers are concerned with matters of a broader nature. They are asking themselves about their responsibilities to their panic-stricken communities and what they should do to rise to these responsibilities.

Just about a month ago the Civil Defense Council of Philadelphia was having one of its regular monthly meetings with civil defense personnel of Philadelphia and surrounding counties in attendance and I offered to expose myself as a banker to questions from the group. One gentleman from a town outside Philadelphia stood up and said:

> "I have my bank account with a central city bank. I have my safe deposit box there too. Suppose the sirens blow and my wife and I decide that the only thing for us to do is get in our car and get as far away from Philadelphia as possible. What am I going to use to pay for gasoline, food, lodging, etc.? What will happen to the things I have in the safe deposit box?"

Well, I told him I didn't want to appear facetious, but I was not sure he would be able to buy any gas, even though he had money in his pocket. The big problem in his mind was what he could use as a medium of exchange to get the things that might be available to provide some of the comforts of life and some transportation for his family.

These are merely a few of the questions that would be in people's minds on this afternoon, when there might be quite a bit of hysteria. There are questions to which we shall try to find some of the answers in our discussion today, as we ponder this horrible tomorrow which we hope will never come.

In speaking to other groups on this subject, I have prefaced my remarks with an appraisal of the possible consequences facing our country in recognition of the fact that we live under the constant threat of massive attack. As you all know, many individuals today are inclined to be indifferent toward the exposure and the present urgency

of preparedness measures. In this audience there is no need to dwell on these premises. You are well aware that a nation prepared non-militarily as well as militarily presents a much less inviting target than one which has given little thought to preparedness outside of the military sphere.

Just as there are many problems to be faced by the military in devising defenses against modern weapon capabilities, there are likewise many problems on the economic front. Today I should like to point out some of the complexities confronting the banking authorities and then describe the nature of the planning in this area to provide for the resumption of banking facilities and operations following an assault.

I am sure all of you recognize the importance of economic mechanisms in the defense of our country. It is academic that military superiority is meaningless without economic support. For any nation involved in war, industrial production is essential to national survival. Because of the nature of our economic system, with its processes interrelated and one dependent upon the other, the continuance of our money and credit system is a must. Production is dependent upon available credit; and credit, in turn, is dependent upon the maintenance of our production processes.

A strong money and credit system in time of disaster has another important advantage. Our ability to recover and strike back depends upon the safety and welfare of our people "Above all, protect your people" was the advice of the bombed-out Europeans during the last war--from experience gained the hard way. Everything must be done that can be done to protect the welfare of the people. A money and credit system that is able to function despite the severity of the situation will aid immeasurably to bloster the morale and well-being of the civilian population.

Before considering the modus operandi of the readiness program, let me outline briefly the structure of our banking system. All banks in the country other than the Federal Reserve banks can be classified broadly as either commercial banks or savings banks. As you know, we operate under a dual banking system and these commercial and savings institutions can be further classified into national and State banks. The national banks hold a Federal charter and are under the supervision of the Comptroller of the Currency, while the State banks receive their charters and derive their powers from the banking authorities in their respective jurisdictions. All national banks and many

State banks are members of the Federal Reserve System and accordingly become subject to regulations of the Board of Governors of the Federal Reserve System. In other words, a national bank by virture of being a national bank is a member of the Federal Reserve System and must keep its reserves with the Federal Reserve bank of the district. A State bank is chartered by the State and has the option of membership or nonmembership.

The Federal Deposit Insurance Corporation is another regulatory body which exercises control over "insured" banks both national and State. Under this system, all of the Nation's commercial and savings banks are responsible to one or more of the supervisory groups, that is, the Comptroller of the Currency, the Federal Reserve Board, the FDIC, and State banking authorities. Through a cooperative effort, therefore, the supervisory agencies can provide for uniform regulations in the event of an emergency.

With these few examples I think you can see, with banks reporting to different authorities, how important it is that there be coordination and cooperation at the highest level.

You may remember also that the country is divided into 12 Federal Reserve districts, with a Federal Reserve bank located in each district. These Federal Reserve banks act as central or bankers' banks, serving the Government and the commercial banks with respect to the issuance of currency, the collection of checks, and other activities of a quasi-public nature. The necessity of a coordinated effort among the Federal Reserve banks and the commercial and savings banks will be appreciated more as we pursue our discussion of a readiness program.

At one Operation Alert--I think it was the year before last--the instructions and the orders issued under the regulations prescribed by the Federal banking authorities provided for the banking system to keep operating; that is, those banks that had a building left and transportation facilities available were to remain open. Apparently the Governor of Pennsylvania didn't know about this, because in his part of the Operation Alert he closed all the banks in the State. So we sometimes have difficulty knowing which side we must listen to.

At the outset, I should like to touch upon the overall plan for the continuance of banking functions at the national level, the regional level, and the local level. There are many problems in these areas, some of tremendous import. I wish it were possible for me to tell you

that all of these problems have been solved. We in banks have problems common to other industries and, in addition, we have problems particularly allied to banking.

In the former category are questions relating to protection of personnel; management continuity; establishment of alternate headquarters, including perhaps arrangements for rendezvous points as well; protection of physical properties; and records protection and storage. Problems identified specifically with the banking system arise in connection with such matters as the continuance of check collection, availability of currency when needed, the nature and extent of participation by bank customers, and arrangements to make credit available following an emergency.

At the national level, the Government as part of its defense mobilization program has documents on file for the restoration of essential functions following an attack. These documents include drafts of legislation, Executive orders, and regulations to be issued by the Treasury, the Board of Governors of the Federal Reserve System, and other agencies designed to insulate the financial system from the sudden shock of widespread destruction. They provide for actions to be taken which of necessity may disregard or be in contravention to normal peacetime requirements and restrictions.

For example, we have restrictions about where we can operate as a bank. In our particular State we can operate, first, where we locate our main office, and also in an adjoining county. In setting up the program in our own bank for alternate headquarters, we want that location to be farther removed than the next county. Proper regulations and instructions would make possible our setting up alternate headquarters from which management can operate at a point which in normal peacetime operations would be prohibited.

Because of the need to provide for liquidity and solvency following an attack, thinking at the national level also is concerned with indemnification, asset validation, currency stockpiling, and similar emergency measures. These matters, I understand, are the subject of another lecture here at the College.

At the regional level, the various Federal Reserve banks have been working on plans for currency stockpiling and check collection and already have taken the initial steps in connection with protective programs for their own respective institutions. Certain of these plans are based

on decentralization of both cash and check operations, with geographical subdivisions within each Federal Reserve district, utilizing designated commercial banks to act as agents for the Reserve banks. All of the Federal Reserve banks also have selected relocation sites with special communications and other facilities. Individual banks working through clearinghouse associations or group organizations must tie in with these regional plans in order to expedite and effectuate the efforts. I shall say a little more about planning at the regional level in connection with check collection procedures.

Now, at the local level there must be voluntary programs by each individual bank. You may be aware that the supervisory agencies, that is, the Office of the Comptroller of the Currency, the Federal Reserve Board, and the Federal Deposit Insurance Corporation, have initiated inquiries concerning the extent of protective measures being taken by the commercial banks in the country. This is in the form of a questionnaire completed at the time of periodic bank examinations. The areas covered by the questionnaire are four in number:

1. What has the bank done to provide some protection for its employees and facilities?

2. What have they done with regard to providing for continuity of management?

3. What has been done in the way of record protection?

4. Have any plans been made for relocation of the main office or a management headquarters?

At the moment, the intention is merely to seek information. Later, some sort of followup policy may be inaugurated.

You know, everybody gets into embarrassing situations once in a while. In our own bank we had a plan which was in operation during the last war period; but, as in the case of most other banks in the country, the plan fell by the wayside. We still have the material and the manual, but nothing presently has been done about it. We decided to await the product of the activities of this banking committee before we reshaped our program and put one into operation.

So when the examiners came in to see us last year and presented us with this questionnaire, the answers to all four questions were "No." It did seem rather a cold answer--just a plain "No." I found later that,

somewhere along the line, there was a note added at the bottom calling attention to the fact that I was the chairman of the committee trying to sell banks on the idea of doing something. So I would like to explain that away by just saying that it was just a little bit early.

So much for the overall defense readiness program. Now, what is the plan for the individual bank?

First of all, just let me sketch the preparatory moves in the development of the planning. Early in 1956, the Office of Defense Mobilization issued an order known as DMO-I-20, which assigned to the Board of Governors of the Federal Reserve System, in cooperation with the Treasury, the FDIC, and others, responsibility for the development of national security measures relating to the operation of the banking system. Among the measures for which the Federal Reserve Board was made responsible are the following:

1. Development of plans and regulations for appropriate general and selective credit controls to curb inflationary pressures during various types of mobilization emergencies.

2. Preparation, in cooperation with the Department of the Treasury, including the Comptroller of the Currency, and the Federal Deposit Insurance Corporation, of plans for maintenance of the monetary system, including the availability of deposit money, the issuance of currency, and the provision of essential bank credit, under conditions of attack.

3. Development of measures in the monetary and bank credit fields to deal with the potential economic consequences of attack.

4. Development of plans, in cooperation with the Department of the Treasury, including the Comptroller of the Currency, and the Federal Deposit Insurance Corporation, to encourage preparedness measures by the commercial banking system designed to assure continuity of operations of the banking system in the event of enemy attack, including the preservation of essential records.

5. Development and maintenance of specific plans to assure the continuity of the essential functions of the Federal Reserve System in the event of attack on the United States.

6. Development and presentation of such other proposals and plans as would be essential, in the judgment of the Federal Reserve Board, to the maintenance and stabilization of the economy under various types of mobilization emergencies.

One of the first moves under DMO-I-20 was the appointment of an Advisory Committee on Commercial Bank Preparedness comprised of seven of the country's outstanding bankers, under the leadership of John J. McCloy, Chairman of Chase Manhattan Bank. The Advisory Committee, in turn, appointed the Banking Committee on Emergency Operations, of which I was asked to be Chairman. Serving with me on this committee are seven other bankers from various sections of the country, selected because of their wide experience and knowledge of operating procedures.

Both of these committees have been actively at work on the project, directing their efforts to the encouragement on a nationwide basis of the development of preparedness measures as set forth in the Defense Mobilization Order. It is recognized that the actual formulation of preparedness plans is a job for the management of each bank. The planning, therefore, must be carried through by bankers themselves. Accordingly, the two committees are developing a planning manual which can serve as a guide for all banks. This manual, entitled "Preparedness Program for Emergency Operations in Banking," is in the form of separate booklets, one devoted to each important phase of a complete emergency program. The first four booklets are virtually completed and it is expected that they will be ready for distribution in the near future. As soon as these publications are released, it is hoped that every banker will recognize the importance of preparing protective measures for his own institution and thereby put his shoulder to the wheel in cooperation with the other banks and local civil defense authorities.

More specifically, what is each bank expected to do? A letter already has been sent to every banking institution in the country, addressed to its chief executive officer. This communication has urged that one individual in the bank be designated and made responsible for its respective emergency program. When the first installment of the planning manual is received, it should be used as a guide in developing preparedness measures. Booklets No. 1-5 are devoted to what might be termed pre-attack procedures, in other words, measures which can and should be considered now. Actually, the first five booklets cover the following areas:

1. Organization and administration.

2. Personnel protection.

3. Continuity of management and alternate headquarters.

4. Physical properties.

5. Duplicate or alternate records.

Since the planning in these areas is not unlike that for other industries, I shall merely cover this phase of the readiness program with a brief resumé of the contents of the several booklets.

Booklet No. 1 discusses the importance of an organized effort within the individual bank, with proper delegation of responsibility to carry out the project. Treatment is also given other administrative matters, such as possible arrangements for funds following a disaster, mutual aid among banking and industry groups, the preparation of a manual of instructions for emergency operations for that particular bank, and practice drills to test the adequacy and effectiveness of the program.

Booklet No. 2, on personnel protection, stresses the need to provide every possible means to safeguard the lives and health of a bank's most important asset--its employees. Separate sections are devoted to protective measures during an attack, welfare services following an attack, facilities for medical aid for the injured, and a training program designed to assure better preparedness in dealing with an emergency.

The third booklet in the series is concerned with the problems which would confront a surviving management in attempting to maintain continuity of operations. In this category are plans for filling director vacancies, executive succession, and the provision for alternate headquarters. Samples of bylaws and resolutions are included as a guide for the management of each bank in setting up its own arrangements.

Many or most of our corporate actions are determined only by action of the board of directors of the bank. You can visualize that if there is an emergency, most of the directors probably will be either concerned with their own welfare or their own business and quite likely would be scattered. So provision has to be made to cover this and make possible certain actions to continue the operation of the bank. Likewise, if certain of the senior officers of the bank are incapacitated or just not there after an attack, who takes over? And in what order? It is not necessarily the first one who gets to the alternate headquarters who becomes the boss man.

Booklet No. 4 entitled "Physical Properties," provides information for the preservation of a bank's physical assets, such as cash, securities, work in process, and records on the premises. A section also considers the protection afforded by the buildings and vaults.

Work on the premises is really very vital when you consider that in quite a few banks in the larger cities at any given moment a hundred thousand or more pieces of paper, such as checks, are being handled. If something should happen to destroy those checks, think of the chaotic condition that would result. So every effort has to be made immediately upon any alert or signal to get that material into what might be considered as safe a place as possible.

The safeguarding of vital records for purposes of possible reconstruction is the subject of the fifth booklet in the preattack classification. This is where we begin to run into some real problems. Here the discussion covers what to protect and how to protect. As an aid in the planning in this area, a checklist of the principal records to be considered is set forth, having for its purpose the providing of a basic guide. A suggested outline of procedures which may be followed for reconstruction purposes is included, and we hope will prove helpful in this phase of the planning.

There the problem boils down to this: There are a certain number of accounts being handled by the bookkeeping department--thousands and thousands of them. Normally each customer receives a statement once a month, and with it are his canceled checks. Suppose that on the 25th of the month all the records are completely lost. How do we reconstruct to determine just how much that customer had on deposit at the time that something happened?

There are basically two ways of providing that information, and getting it off the premises. One is by filming everything that is handled. The other is by carrying through a carbon recording of every transaction.

Now, if we film everything, it sounds rather simple; but it isn't quite as simple as you might seem to think. Also here is where we begin to run into expense, and expense is a matter of concern to all bankers. If our bank were to film all its records and all it checks, it is estimated that the cost would be approximately $8 per 10,000 checks. That would mean that for one of the bookkeeping departments located in the Philadelphia area, where the bookkeeping is centralized,

and where a current day's average of 90,000 checks are charged against the accounts of customers, the cost would be $72 a day for just the checks, and you would have to have all of the other records. And then you always wonder whether the film will have an image on it that you can read if you have to look at it.

On the other hand, under the carbon method, the expense is reduced considerably. It merely means the transmission of carbons each day or perhaps once a week. Each carbon periodically has included on it a number that would always identify a balance with a particular account. Then the thing to do is to get the carbons as far away as possible; and, if something happens, to reconstruct by backing up.

There is another area of planning which can be considered in the preattack classification. What about customers' participation in a program to ready banks for possible nuclear attack? Isn't it reasonable, if not necessary, to request some overt acts on the part of depositors to supplement the activities of the banks? There is the feeling in some quarters that the emphasis in banks should be directed toward protecting their assets; the liability side of the ledger should be a matter for substantiation by others. Such a plan might be most beneficial if it could be adopted on an industrywide basis. For example, think of the simplification for banks with respect to the bookkeeping operation if depositors could take over the responsibility for reconstruction and the determination of balances in their accounts. There are many who consider such a possibility to be wishful thinking, however. In other words, let the banks make some provision to protect and be able to substantiate records of that which is their own, either physical property or that which is owed to them by others, but on the other side ignore the records of what the bank owes to its depositors and require depositors to come forth with something that would substantiate their claims.

Despite the number of apparent difficulties, it seems desirable to promote preparedness planning on the part of customers. First of all, the conscientious viewpoint suggests a sharing of the burden of protective measures. Secondly, it seems likely that there will be many questions of priority following a devastating attack, and the concern which can validate its claims with supporting records is in a much better position than one not able to do so. In addition, the advantages to be gained through dispersion of records are on the side of those with their own programs.

Because of the wide differences in accounting methods, it is difficult to propose specific recommendations to be followed by bank

customers. The general area to be covered from the standpoint of banking relations is readily apparent, however. All contractual relationships, and entries affecting them, whether pertaining to deposit accounts, borrowings, safe deposit boxes, fiduciary arrangements, or other activities, should be included.

The other booklets to be prepared will cover what can be termed the postattack procedures. In this category are those functions which were previously mentioned in connection with problems particularly identified with banking, namely:

First, and very important, is the collection of cash items and noncash items. For those of you who do not understand all the banking terminology, a check is a cash item. In other words, when a banks gets a check, it has authority to immediately charge it to the proper account. A noncash item is some sort of a draft, which cannot be charged against an account until there is the proper clearance or proper authorization from the bank on which the draft is drawn. Another phase of postattack has to do with cash or currency operations, and the third has to do with credit.

Some of the complexities in these areas will be readily apparent. Think of the difficulties in trying to operate in today's economy if a large portion of the stock of currency in Federal Reserve vaults and in large metropolitan banks were destroyed or buried under huge piles of rubble. What of the firms and individuals with money on deposit, yet unable to make withdrawals from their banks? Over 10 billion checks now pass through our banking system annually. Projections indicate that this figure will reach 14 billion by 1960. Visualize, if you will, the tremendous confusion and entanglements created if many key banks in the collection chain were suddenly made inoperative. What about the credit aspect? Consider the case of a firm in San Francisco with a check, say, for $10,000, drawn on a New York bank which has been bombed out of existence and all its records lost. How does the west coast firm collect its money? Just to complicate this theoretical situation, suppose in addition, the firm which issued the check and owes the money is out of business and all its assets destroyed? These are merely a few of the ramifications which must be considered in attempting to develop a workable plan for emergency operations. Since these activities are dependent to some extent upon Government economic measures, all of which have not been resolved, this phase of the readiness program cannot be spelled out with any degree of finality. However, I shall discuss a proposed plan for check collections where the thinking has more or less jelled and then point out some of the possibilities in the other areas.

The collection of checks under emergency conditions presents a most difficult task. A survey just a year ago by the Federal Reserve System indicated over 52 million demand deposit accounts in the Nation's banks, 78 percent of which, or better than 40 million, were personal accounts of individuals. In order to get a better understanding of the procedures proposed to effect collection and settlement during an emergency, perhaps we should first review the normal collection processes which effectively handle the annual 10 billion check volume for all of these depositors.

The banks of the country have developed a highly efficient check clearing system which provides for the receipt of credit for any given check within a few days. The key banks in the collection process are the Federal Reserve banks and large city correspondent banks. In practice, a collecting bank ordinarily sends checks either directly to the bank on which the items may be drawn; or through collecting agents such as a city correspondent bank, the district Federal Reserve bank, or Federal Reserve banks in other districts. In the latter instances, the collecting agents in turn will dispatch the items to the drawee banks or perhaps to another collecting agent, where such routing will expedite collection and credit.

The plan for collecting checks during an emergency, as presently constituted, is based on the principle of decentralization, utilizing relocation sites and banks in undamaged areas to perform operations normally completed in financial centers which may have become damaged. Each Federal Reserve bank has provided for a relocation office to function in a limited capacity during an emergency affecting its regular office. In addition, commercial banks within Federal Reserve districts may be set up into "emergency clearing groups," with certain banks designated as agents of the respective Reserve banks.

Correspondent banks likewise will be asked to designate alternate headquarters or a relocation site where essential functions may be continued during an emergency. By means of these arrangements on the part of Reserve banks and correspondent banks, it is contemplated that the clearing processes may continue to function during a period of emergency, even though of necessity the routing of checks may be little more circuitous than under present procedure.

Perhaps a couple of illustrations will serve to explain how this overall plan will work. Let us assume that a manufacturing concern in Springfield, Illinois, has shipped goods to a distributor in New York

City and has received in payment a check for $10,000 drawn on the distributor's account in the Chase Manhattan Bank. Assume further that the check normally is collected through the facilities of the Federal Reserve banks. Under these assumptions, the item in question, therefore, is routed as follows: The firm in Springfield deposits the check in its account in a Springfield bank, which sends it to the Federal Reserve Bank of Chicago, from where it is dispatched to the Federal Reserve Bank of New York and thence to the drawee, the Chase Manhattan Bank, for payment.

Suppose, now, that the Federal Reserve Bank of Chicago has suddenly been rendered inoperative, either because of severe damage or because of inaccessibility as the result of a breakdown in communication processes. In this situation, the bank of deposit in Springfield might send the $10,000 check to a previously designated agent of the Chicago Reserve bank, for transmittal to the New York Federal Reserve Bank and then to the drawee. It can be seen in this theoretical case that the agent bank replaces the inoperative institution in the collection chain.

Let us consider another example. Using the same basic transaction, assume that this $10,000 check normally is routed through correspondent banks. In other words, the bank of deposit in Springfield ordinarily would send the item to, say, the First National Bank in Chicago, which in turn might send it directly to the Chase Manhattan Bank. If the First National Bank of Chicago should be unable to operate, the Springfield Bank could dispatch the check in accordance with the former's instructions, perhaps either to a previously designated alternate headquarters, or to another collecting bank, from whence the routing would be continued.

These examples indicate relatively simple adjustments in the overall clearing process. It will be apparent, however, that following a severe attack with possibly all of the Reserve banks' regular offices and most of the larger commercial banks out of operation, the tremendous volume of daily transactions would produce many disruptions. Not only would the facilities of banks in undamaged areas be heavily taxed under a greatly expanded volume, but these institutions in all probability would be called upon to perform operations beyond those undertaken in a normal economy. Granted that there will be delays and complications, nevertheless, the planning program is designed to preserve the basic features of our collection processes.

Among the damaged institutions following an assault would be many drawee banks and, consequently, the routing procedure could not be

completed. This brings up the question of final payment and credit. In our theoretical illustration, for example, where would the collection journey of the $10,000 check end, and how could the manufacturing firm in Springfield receive payment?

The planning in this area has not been finalized, but one method is to permit collecting banks, upon proper authorizations, to hold checks, with provisional credit extended. Under this plan, the routing of checks would proceed to the last feasible point in the collection chain, where they would be held until such time as further processing would be possible. Settlement for the items so held would be on a tentative or provisional basis; that is, credit would be passed just as though the checks had been paid through presentation to the banks on which they were drawn. By means of this provisional credit, it is contemplated that the financial mechanism of the country can continue to function, despite the severity of the situation.

At this point I will give you a visual aid by showing you a chart.

Chart 1, page 16.--Just to make sure that our terminology is understood, or to attempt to do so, let me explain this chart. Down across the bottom, where you see "drawee banks," a drawee bank is the bank on which the check is drawn and the bank that will pay the check provided the check is in order and the money is there. The bank on top of the chart, the " sending bank," is the bank holding the check, having received it for deposit from one of its customers, and being payable by this drawee bank.

Let us say, just for illustration, that the drawee bank is in New York City, and this is a Springfield, Illinois, bank up at the top, the sending bank. Under normal circumstances, normal operations, the Springfield bank has several alternatives for getting its money for its checks, to get the use of the money so they can pass it on to their depositors. They could come right down here and send it directly to the New York City bank, providing they had some account relationship with the New York bank. That is No. 1. That is the most direct course--direct from the Springfield bank, as the receiving or sending bank, to the New York bank.

CHART 1

GENERAL PLAN FOR COLLECTING CASH ITEMS DURING AN EMERGENCY

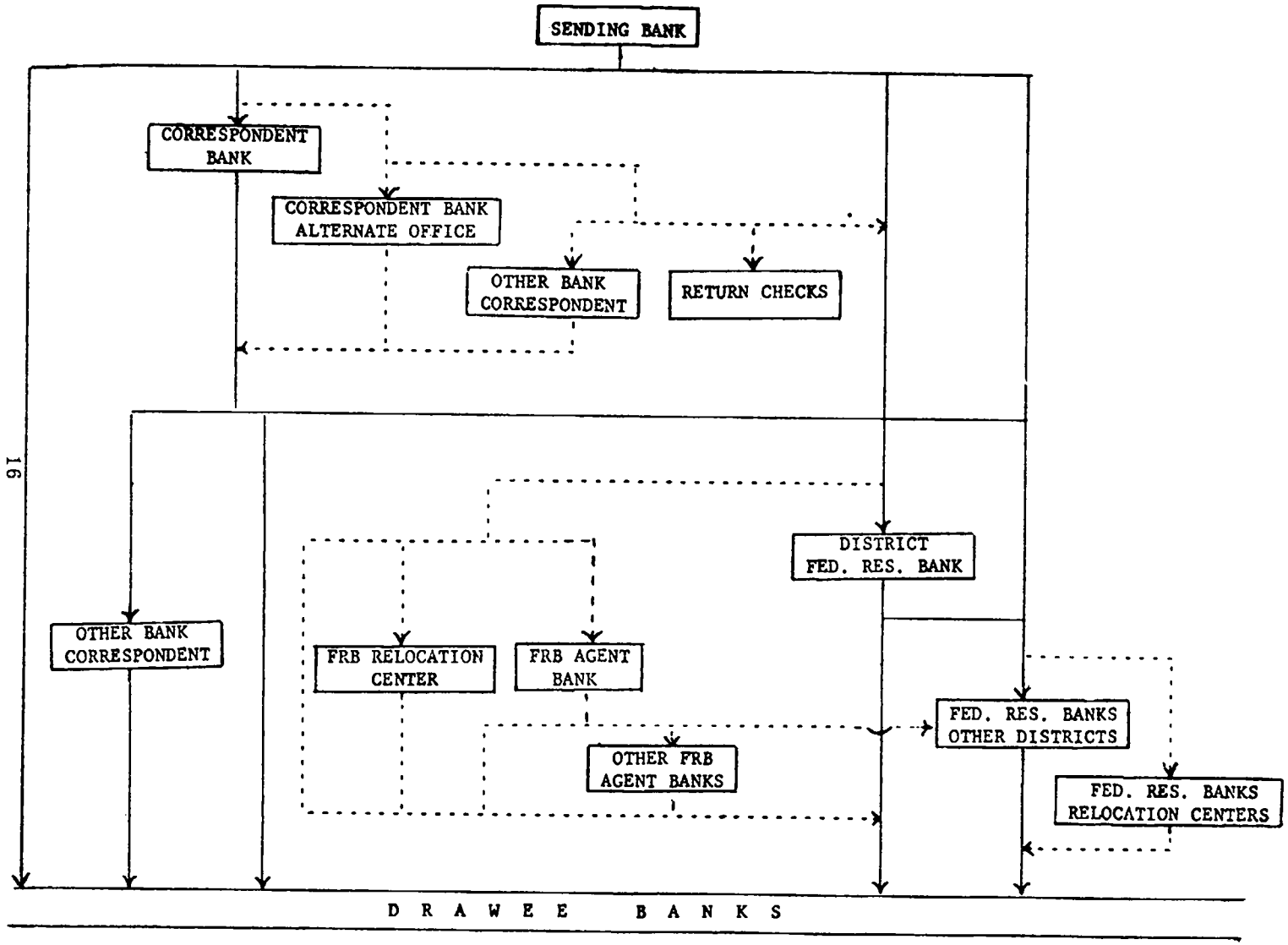

But not every bank has accounting relationships with every other bank; so that works only in a few cases. The second alternative is for the sending bank, the Springfield bank, to send the check to one of its correspondent banks. That might be a bank in one of the Federal Reserve cities or one of the larger cities that acts as a clearing bank for so-called country banks. So in this illustration we will assume that this correspondent bank is in Chicago. So the Springfield bank's second choice then would be to send the check to the Chicago bank, which either might route it through another correspondent or route it direct to the bank in New York City, depending on its relationships.

The dotted lines we will save for a little bit later.

The third alternative would be for the Springfield bank to clear the item through the Federal Reserve System. Normally this bank would send the check to the Federal Reserve bank in its own district. So we will assume here that it is the Federal Reserve bank in Chicago.

Because the item is payable outside that district, it would have to go through the Federal Reserve bank in New York. If the item is payable within the district, the Federal Reserve bank would clear it direct. But outside the district it goes to one of the other Federal Reserve banks.

That is the preattack normal operating procedure, and that is the process today. Maybe it would be better, maybe the confusion would be better organized, if you have any questions about the normal peacetime process, that you ask them now. You can do it later too, but if you have some, it might be better to ask them now and clarify the situation.

QUESTION: I would like to know this: If you send a check through this route for clearance, does word come back through the same route whether it is good or not?

MR. COOPER: I will have to answer that in this way: In normal operating procedure word does not come back unless the check is not good.

The Springfield bank, having deposited funds with its correspondent in Chicago, has received book credit. In New York the Chicago bank gets credit. We know that on the average these funds are available within a certain number of days; and unless we have heard that the item has been dishonored and the check is being returned, we assume that the item has been paid.

In our own operations, as of now we handle approximately 500,000 checks a day through our clearing departments and about a little less than 1 percent of those checks bounce for some reason. Maybe half the bouncing is because the check is not in order--has not been indorsed or the signature is not right. The other half would be because the money is not in the bank.

Now, if this correspondent bank in Chicago is out of operation, they then have to follow a different course, and that is shown on the next chart.

Chart 2, page 19.--The lines on this card are the dotted lines on the first chart.

You will remember, if the Chicago bank is in operation, the check came right down to it from the Springfield bank. If the Chicago bank is out of operation, either because of damage or because transportation facilities are not available, this bank would be bypassed under instructions previously given by the Chicago bank. Those instructions might say to route the item through the Chicago bank's alternate office, which might be a 100 or 200 miles away; or it might be cleared through another correspondent bank by prearrangement. It might be returned, or it might be then switched over and handled through the Federal Reserve System.

This point here, the returning of the check, is a controversial point. When these plans are released, that may not be included, because we hope that if the proper measures are provided, it will not be necessary to return any checks. The checks may be held at some point--which I will come to in a moment--so that the funds are available to the Springfield bank, the sending bank, for the use of its depositors.

If any bank is rendered inoperative and if provision has not been made for credit, making it necessary to return the check, say, to the Springfield bank, its customers would not have the use of the funds. You can see immediately what a disruption of the economy of the country that would bring about, because a private firm must have the use of its funds if it is to stay in business.

Chart 3, page 20.--Now, if the bank clears checks through the Federal Reserve System or if its correspondent bank has been rendered inoperative, these are the possibilities:

CHART 2

EMERGENCY PLAN FOR COLLECTING PAR AND NONPAR CASH ITEMS NORMALLY ROUTED THROUGH A CORRESPONDENT BANK

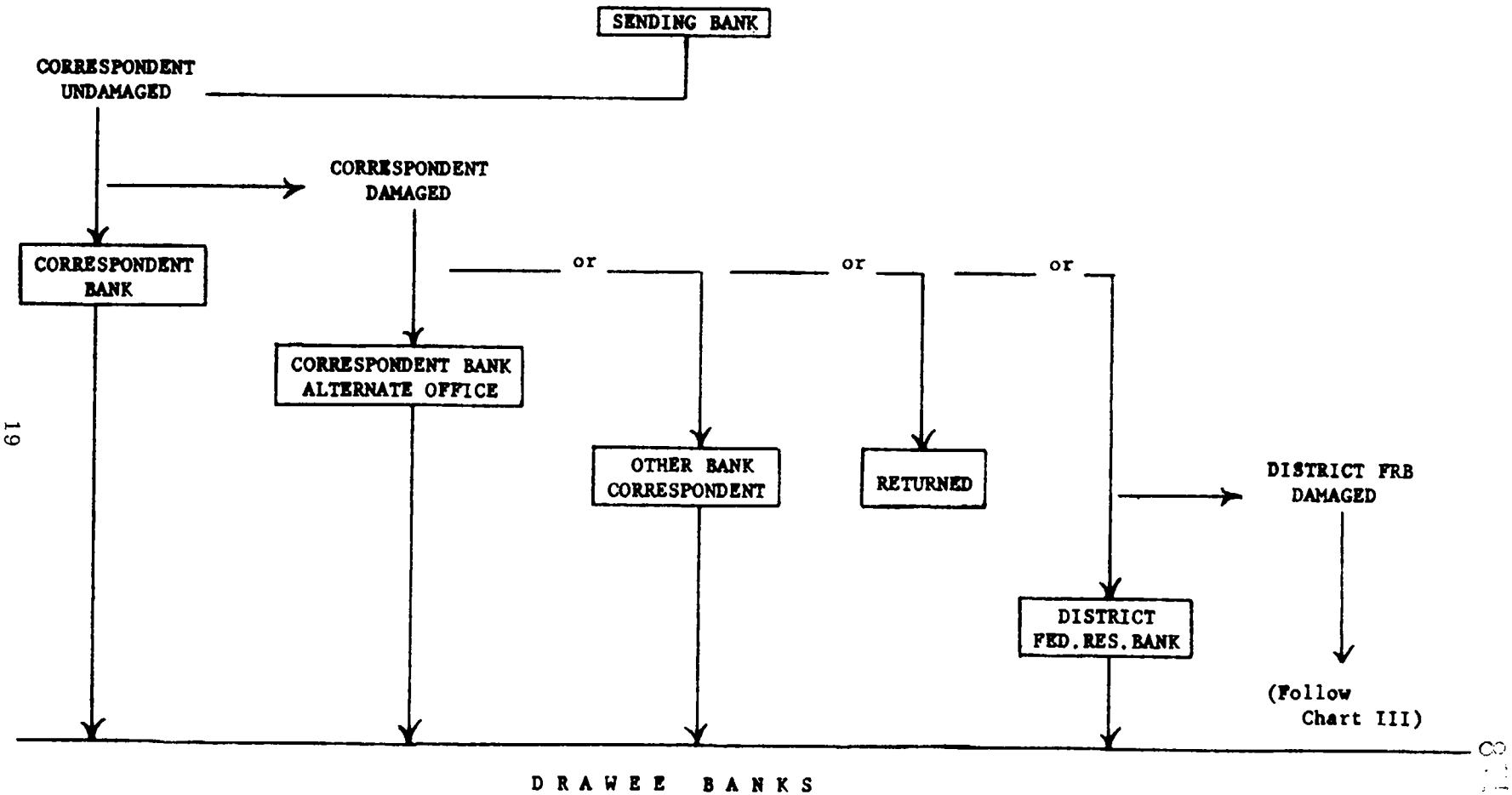

CHART 3

EMERGENCY PLAN FOR COLLECTING CASH ITEMS NORMALLY ROUTED THROUGH A FEDERAL RESERVE BANK

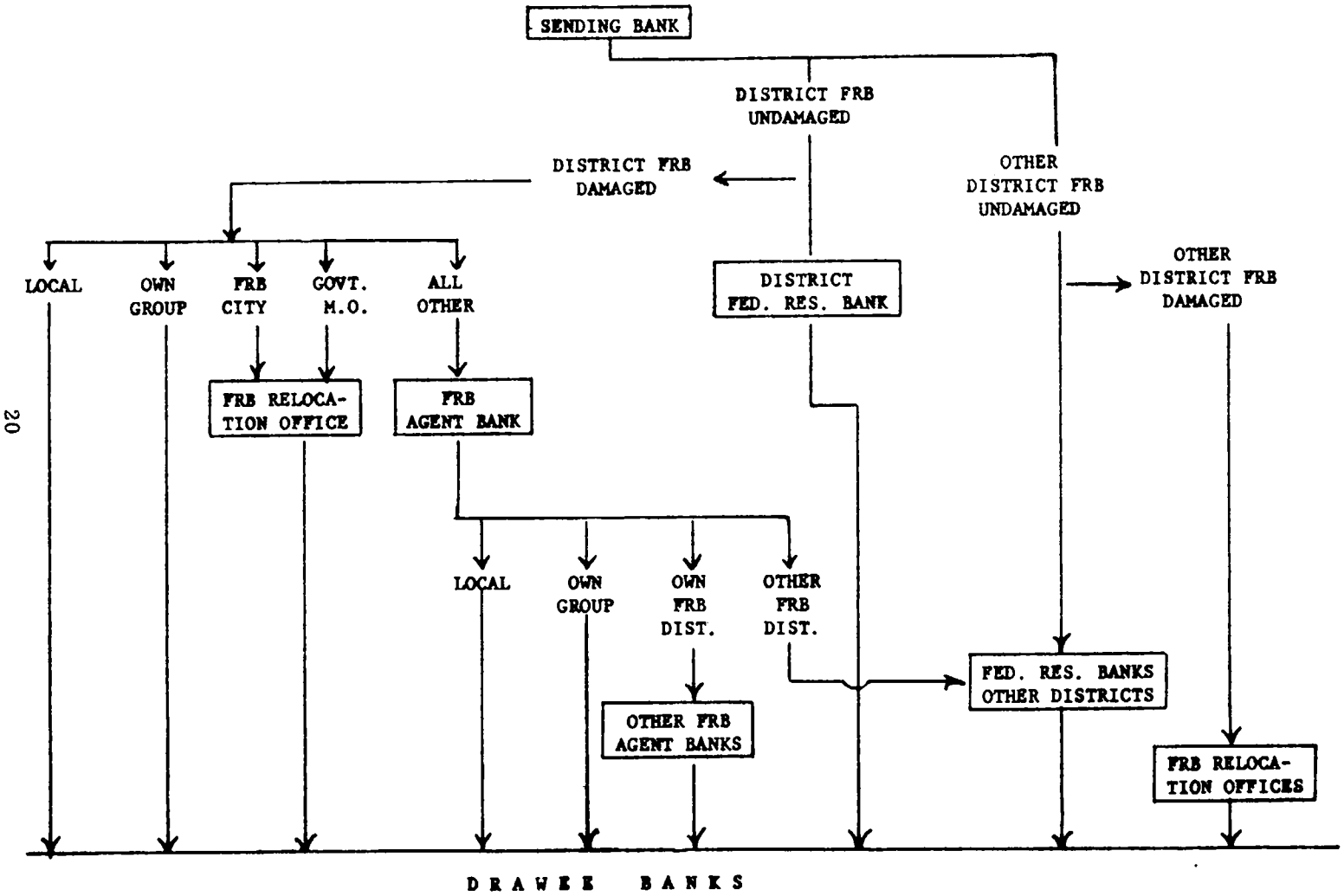

If the Federal Reserve bank of a district is in operation, then, of course, the check comes right on down to the drawee bank, either direct or through another district to the drawee bank. But if the Federal Reserve bank of the district, we will say, the Federal Reserve Bank of Chicago, is out of operation, then we have this detour.

Here is where we run into this idea of the Federal Reserve districts being subdivided into what are called emergency clearing groups, where the activity within the district is handled on a decentralized basis. Instead of all going to one point, they may be broken up into 12, 15, maybe 20 different parts, depending on the nature of the district and the business.

Then in each of these emergency clearing groups a commercial bank might be designated as agent for the Federal Reserve bank to perform the functions of a Federal Reserve bank within its respective segment of the district.

So if the Springfield bank is holding these checks, and the Federal Reserve bank is out of operation, there is then a four-way or five-way split. First, the Springfield bank would be asked to collect the items within its own area directly by some means, and also within its own emergency clearing group. The difference between these two merely is that this bank may be in Springfield or a suburb, and this other bank may be 50 miles away--anywhere within a 50-mile radius.

Then items that would be payable normally by banks located in the same city as the Federal Reserve bank, or Government items or money orders which the Federal Reserve bank would handle are sent to the relocation office of the Federal Reserve bank. Everything else would go to the agent bank which has been preselected and set up. The agent bank then in its segment would collect the items that are either in its own town or within its own group. The agent bank would take all the other checks that are payable within the Chicago Federal Reserve district and sort them out according to the agent banks of the other 12 or 15 segments of the district; and anything payable outside the Federal Reserve district then would be sent to a Federal Reserve bank in some other district, wherever it might be.

Those are just briefly the check collection possibilities. Maybe we should have a short break here.

During the break I was asked what might be called the $64,000 question, or even the $128,000 question. It was this: What happens if this bank in New York City is out? (Chart 1, page 16)

Say that the Springfield bank has a $10,000 check on New York City, and New York City is out of operation, either because of damage or because transportation is not available. The Springfield bank would send the check to its correspondent or Federal Reserve bank. But what if neither of them is in operation?

Well, if we expect to maintain the solvency of our economy and have anything close to normal operation in the segments of the country that are undamaged or where transportation facilities are available, somebody has got to give this Springfield bank the use of its $10,000 for its customers' use. The only way that our committee feels this can be accomplished is by some form of guarantee of deposits or indemnification of assets. That is a problem that has yet to be resolved. However, the mechanics of it would be these:

Assuming that there is a guarantee of deposits or an indemnification of assets, the plan is that at the last point of operation we will have this bank, either Chicago or this one here, say it is the Federal Reserve Bank of Chicago, or as close as it can be gotten, hold the check. It is held under what we have chosen to term a provisional credit setup.

It is held at that point until word is received that the paying bank is back in operation, either at its regular location, at an alternate location, or that somebody is liquidating the affairs of the bank. At that time the checks being stacked up somewhere along the line move on through; and if they were drawn in good faith, drawn against money that was there, in 99 percent of the cases and maybe more, the checks would be honored, and that is the end of the line.

The liquidating agent, shall we say, of this bank, if it is not going to resume operation, or the management, if it is going to resume operation, would, in order to make these funds available to pay those checks, have used the provisions for indemnification of assets, so that it can collect the money due to it on loans to customers who may have been knocked out of business or who are not there to pay the loans.

Now, who pays the bill for the guarantee of deposits and the indemnification of assets? Somebody has to pay the bill after, of course, the funds in the bank that belong to somebody who is not there to claim them have been offset against it.

I would just like to take a few moments to talk about currency operations during an emergency, and then I will be glad to try to answer any questions that you might have.

Someone has said that if an area is being evacuated, the people will want to go out of the area with some money in their pockets. How do they get the money? Who is going to make it available? Where is it coming from? Where will it have been stored ahead of time?

Currency operations during an ermergency are another matter of far-reaching importance. Plans for the possible storage and distribution of reserve supplies of currency therefore must be made a part of the readiness program. Back in the days of the National Bank Act, banking institutions were permitted to issue their own notes, under certain conditions, so that the distribution of our money supply was in the hands of the bankers as well as the Treasury. Occasionally, one still may come across one of these banknotes, although they are rapidly disappearing from circulation. Today, the control and distribution of currency is centralized in the Federal Government, with powers delegated to the Federal Reserve banks as Government fiscal agents. Some idea of the scope of these activities can be had from the figure on money in circulation, which presently stands at approximately $30.6 billion.

Of this $30.6 billion, approximately $3.5 billion are now held in the vaults of the banks, so that $27 billion are out in the hands of the public. That comes to about $180 per capita of the population, for every man, woman, and child in the country.

When I saw that figure, I found I was below the average. But what helps to bring that average up is such things as happened just recently in Philadelphia. A lady was found to be incompetent to handle her affairs and the court appointed someone to take over. He found in a safe deposit box in another bank $1 million. To our advantage, the money moved to an account in our bank.

Now, we are certainly aware of the fact that there is a tremendous amount of, shall we say, psychology involved here. Unless the banking system can develop a plan, and unless there is assurance from the Government authorities that there will be solvency to our financial system, it would certainly be human nature, unless otherwise prevented, to grab as much of your cash and valuables as possible and take them with you. We are hoping that we can achieve this objective and that people will have confidence in the financial system; that they will recognize that their checks could be as good as money. If such is the case, we think a job can be done. Otherwise, if there is any loss of confidence, we can see nothing but chaos.

Preparedness measures in the area of currency operations must consider the need for the storage of reserve supplies of currency and the "where" and "how" of the distribution. Should these reserves be centralized or is geographical distribution on a wide-scale basis desirable? Should there be a printing of currency in a special form for emergency use? Should distribution during an emergency be accomplished through commercial banks and, if so, who should appoint these agents? The matter of distribution agents opens up a host of other considerations, such as the selection of geographical locations, mindful of normal trade channels and transportation facilities; adequacy of vault accommodations, considering space, alarms, and protection systems; availability of personnel; internal audit controls; and the manner of making deliveries of supplies among participating banks. The normal currency flow in a particular area, that is, whether under ordinary conditions banks accumulate or must requisition cash, would have a bearing on the planning. Closely akin to cash transfers are the transfers of funds throughout the country by wire, which must be included in the preparatory moves.

In considering the matter of credit in the postattack period, we are faced with some perplexing problems. To begin with, there are two distinct viewpoints as to whether banks should remain open or should immediately be closed following a serious assault, based largely on one's judgment of the probable reactions of the people. There are those who favor a general banking holiday or moratorium in order to give bankers and supervisory authorities an opportunity to appraise the temper of the public during a "cooling off" period. This also would serve to prevent hoarders from having access to funds until regular control regulations could be made effective.

The opposite viewpoint sees the advantages of uninterrupted banking services, especially in undamaged areas where the need for service would be continuous. Banks in fringe areas might be given discretionary authority to reopen either on a fully or on a limited basis, with the objective always the national interest. An argument in favor of individual discretion is the possibility that bank supervisory authorities in the fringe areas may suffer severe losses or may be swamped with other problems at such a time. As a practical matter, decisions with respect to closings might be made at the clearinghouse or regional level if discretionary powers were granted.

Irrespective of the form these emergency regulations should take, it is important that money on deposit, particularly demand deposits should

be made available as soon as possible. The impairment of the use of money for any extended period would contribute to economic collapse. This will be evident when it is realized that demand deposits represent roughly 80 percent of the money supply of the country. In order to maintain economic activity in the postattack period, therefore,- the early access to money, whether in the form of currency or bank deposits, is essential.

The availability of credit also is an essential in the early postattack period. The objectives in this area would include preparations to make it possible for both undamaged and partly damaged businesses to continue to operate and produce. Undamaged enterprises might need new commitments if existing lines of credit could not be accommodated. Concerns with partially destroyed facilities would need funds to produce, with whatever physical resources remain, as well as to finance essential reconstruction as rapidly as conditions permit. The mechanics of the arrangements for credit accommodations cannot be completed pending the establishment of the general rehabilitation pattern at the national level.

These plans constitute the readiness program for emergency operations in banking. All of the proposed measures and arrangements are designed to assure continuity of operations in the event of attack, and following a disruption in activities, the restoration of essential functions with a minimum of delay. Certain phases of the program have not been completed; others may need revision in the light of future developments. If the planning would be effective, it must be kept fluid.

In summary, may I reiterate a few significant points. As you know, there has been and still is a widespread apathy or indifference toward the exposure and consequences which are ever present in our modern world. In one respect, we are realistic as we ponder the next step in man's effort to penetrate the unknown; on the other hand, we are inclined to close our eyes in the smugness of a false security or disbelief in present-day realities. At the other extreme are the people who say, "What's the use?" There are always some people like the fellow who said: "What's the use of doing anything? If it happens, we are all going to be killed. Why should I learn anything about first aid?" Well, we can still save a lot of lives if we learn about first aid. The banking fraternity is not removed from this sphere of thinking. One of the big tasks confronting the planners for emergency operations in banking is how to develop an appreciation of the urgency of enlisting the wholehearted support of all the commercial and savings bankers throughout the country.

Secondly, I think you recognize that the problems attendant with emergency planning for banks are many. No one can really know what a large-scale nuclear attack upon the United States would be like. The devastating power of the H-bomb and the delayed action horrors of radioactive fallout are almost beyond comprehension. Even if these unknowns could be anticipated with some degree of accuracy, the job assumes enormous proportions. Although the problems to be reckoned with are many, these might seem small when compared with the difficulties confronting the surviving members of the staffs of destroyed banks which have given no thought to preparedness planning.

Thirdly, the need for considerable flexibility in the matter of defense plans among banks is axiomatic. Large banks with branch systems may consider it advisable to set up defense organizations with relatively elaborate programs; small institutions may feel that simple protective measures formulated at the regional level will suffice. The plans of the metropolitan bank may be greatly different from those of its rural correspondent. The procedures for the saving fund society may vary from those proposed for the commercial bank or trust company. Variations in programs will exist, but the important consideration is that every bank should have a plan, making its own decision as to its nature and scope.

Fourthly, the readiness program for banks is predicted on a coordinated effort. The planning program of individual banks must be coordinated with the planning for the Federal Reserve banks, and Reserve bank planning must be coordinated with Government planning. So far we have been extremely pleased with the cooperation existing among the various agencies and those involved in banking--the Federal Reserve and others. The machinery will be put in motion at the national level through the issuance of Executive orders. The Reserve banks at the regional level will provide for the continuance of currency distribution, check collection, and other central bank functions. The commercial and savings banks will set up programs for their own institutions, providing for protection of personnel, continuity of management, alternate headquarters, protection of physical properties, and protection of essential records. The program for banks will tie in with activities at other levels in providing for collection of checks, currency operations, customer participation, and credit.

Lastly, all that I have said today adds up to a job for bank management. The Office of Defense Mobilization, the Federal Reserve Board, the Treasury Department, various supervisory agencies, and committees

of bankers have all cooperated in laying the groundwork. The results of their efforts will be measured in the effective acceptance of the program by the bankers throughout the country. American bankers as a group have always been leaders in the community--they have long carried out their responsibilities in the cities and towns in which they live. The program to ready banks against the dangers of nuclear attack is a responsibility they have been asked to accept. I am confident that they will.

I will be glad to try to answer any questions that you have.

QUESTION: I can see how your emergency plan would be effective in the long term or where reconstruction or outstanding debts are involved. But in case of an emergency shouldn't the checks be held as barter items at the local level; and let the local bank, if there is one, or whoever is there, hold them provisionally, rather than trying to clear them through another bank? In other words, they are only taken at face value; and if the plan would permit a maximum or a certain amount and no more to be used for local purposes, then those checks would float right around in the locality without going through the clearing process.

MR. COOPER: The checks that are good will be readily cleared and the funds made available.

QUESTION: I am only worried about the first few days of the emergency. It seems to me that as a matter of survival you have to take these checks at their face value and let them circulate around as cash.

MR. COOPER: You are perfectly right. However, if guarantee of deposits or indemnification of assets is available, we have then the facilities for the provisional credit. Then it is much easier and more simple for the individual or businessman or the people in that town to use their own checking accounts, because the funds will be available to them. If that isn't available, then somebody--in this illustration the Springfield bank, which was holding the check for $10,000--would never get their money.

QUESTION: I am thinking of provision being made in the local area rather than being centralized.

MR. COOPER: There is one other pratical problem, and that is that we would want the checks held and the checks consolidated at a few

points rather than at many points. In other words, if your drawee bank is the New York bank, rather than having possibly 14,000 banks throughout the country all holding checks on that New York bank, they would come on through and at some point along the line they would be held and consolidated.

QUESTION: The illustrations that you gave are of checks that had been drawn prior to this devastation. Suppose, now, that I have my money in a local bank here and I don't have much cash in my pocket and this bank suddenly disappears. What is going to happen to my money which is in that bank? I want to get it out now, but the bank is no longer there. Can I write a check on that bank and take it down to another bank that is there and have them honor it?

MR. COOPER: You could, yes, if this plan is put into effect.

QUESTION: Will the other bank honor it?

MR. COOPER: Yes, providing that this banking committee's plan for indemnification is in effect. Yes, sir.

QUESTION: You did not discuss the possibility of a run by the depositors on their accounts and a bank not possessing the necessary funds to meet all their demands. Would your plan provide for possibly a one-day or two-day moratorium to enable that bank to get prepared?

MR. COOPER: Yes. But we are hoping that people will have confidence in the financial system and not make a run on their banks. There will have to be discretionary power somewhere along the line to temporarily close down if that should occur. If people start a run on a bank, it will have to close down long enough so that the checks can be handled and processed. I think about 80 percent of the transactions of the country today are by check. So that should continue.

You are absolutely right. There will not be enough money to go around. It would have to be rationed out somehow.

QUESTION: Suppose that this run on the bank took place over a longer period of time in anticipation of an attack, and people took more and more money out of the bank and put it under the mattress or in a safe deposit box. To what extent would this have to happen before the banking system would really be upset?

MR. COOPER: Not too long. In fact, some years ago we had quite a bit of trouble in the banking system in that regard. After a bank has used up its available cash, its available funds that it might have above its requirements for reserve and other things, the only way they can get money for their depositors is to get it back from customers who have borrowed it or from selling investment securities.

Now, they may have millions of dollars invested in mortgages. They are going to get that back over a period of time except in a few cases. Generally speaking, you get it back over a period of 10, 20, or 30 years. But certainly if you tried to call that all in, you wouldn't have a chance.

Also a bank has the privilege of borrowing from the Federal Reserve on rediscount. Besides that, we have today what was not available in the early days--the Federal Deposit Insurance Corporation, which can take over if a bank is in critical shape.

The whole thing is really the confidence of the people in the financial system. That is tremendously important.

QUESTION: What are you doing about putting your records under the ground? That seems to be the best way of maintaining records.

MR. COOPER: I think there is a lot of confusion at the moment on that. In our local Sunday paper a few weeks ago there was sort of a debate between the civil defense directors of the city and the State. One was suggesting that they would have to build a lot of shelters in the city, and the other was suggesting that the only way out was evacuation.

Now, I don't know what the decision will be. The tendency and the movements up to this point have been for the banks to provide for storing their records at some place--it used to be 20 miles out, but now it is a couple of hundred miles out--away from the city and have the site maintained. There are commercial outfits also offering space to banks for that purpose today. But generally speaking, most of them will provide for storage at some remote spot.

QUESTION: I get the impression that this plan of yours is a voluntary plan and that banks can either participate or not as they want. Don't you think they should be forced to do something like that and not just have you trying to force some such plan down their throats?

MR. COOPER: Yes. We are trying to sell it.

QUESTION: I think it is all right to get a basic plan drawn up, but eventually I think we are going to have to depend on the Government forcing the banks to do it.

MR. COOPER: Yes. At the moment it is voluntary. We are doing some missionary work.

Possibly in the next year or so, after this material is available for their guidance, when the examining authorities come in periodically once or twice a year, if they are not satisfied with what the bank is doing, they can incorporate that in their report to the board of directors. After each examination the board of directors gets a report, in which the examiners can take management apart, can criticize management if they want to. They can call this to the attention of the board. Then beyond that, if there is any real enforcement, it would have to be along the lines that we have today. I can be removed from office. The board can take the management out.

QUESTION: What if the bank is not part of the Federal Reserve System?

MR. COOPER: There are more that are not than are in the country. In round numbers there are 14,000 banks, and most all of them are members of the Federal Deposit Insurance system. All of them have their charters either from the State or from the national authority. Right at the moment we are getting splendid cooperation from the National Association of State Bank Supervisors. So we get all of them somewhere along the line.

Also there is one more item that could be really the climax. If a bank wants to get any benefit from the indemnification of assets or the guarantee of deposits, it is quite likely to be a condition that they must have a program of their own. In other words, they cannot collect on their assets unless they have set up a program, and it has to be done in a way that is satisfactory to the supervisory authorities.

QUESTION: You touched on the Federal Deposit Insurance Corporation. Under your plan where and when and to what extent does it become involved?

MR. COOPER: They become involved only in a bank failure; or in recent years, when a bank is on the brink of financial trouble, they will step in to preserve what is there and rehabilitate the situation by effecting a merger with a good, solvent bank. But they would pay off depositors only in the case of a failure.

They have a substantial reserve fund, which many people don't realize, which has been built up by the banks themselves. Also they have borrowing authority of $3 billion from the Treasury. That, plus the capital position of the banks today, puts us in much better position than the banking system has ever been in history.

QUESTION: Did the British and Germans use a similar system during the last war?

MR. COOPER: They have quite a different banking system than we do. They did not, and still do not, have the check handling that we have here, which creates so many of these problems. They basically worked off location.

There was a very interesting book written by one British banker which explains how they operated during the war years over there by having their bookkeeping and other work handled at some estate miles away from London. They provided for the protection of their records there. But I think you will agree with me that the possibilities today so far as damage is concerned are quite different than they were in those days. I believe they relied a great deal on the honesty and integrity of their depositors in making claims during the reconstruction or restoration period. Our big problem in the American banking system is these 10 billion pieces of paper that have to be handled every year, and it is ever increasing.

COLONEL BILBO: Mr. Cooper, it is very encouraging to know that someone is planning for the future safety of our money for those of us who have it. We are particularly glad that you are doing it. On behalf of the Commandant and the student body, I wish to thank you for a stimulating, interesting, and informative lecture. Thank you, sir.

(6 June 1958--4,260)B/bn:mga

D65346